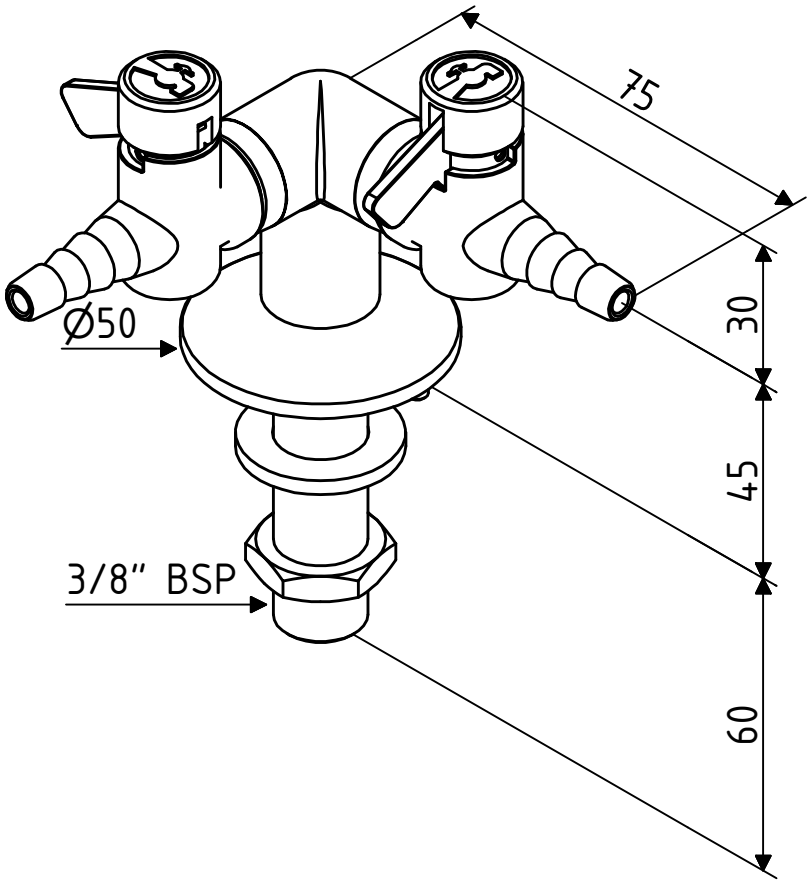
75
30
45
60
Ø50
3/8" BSP