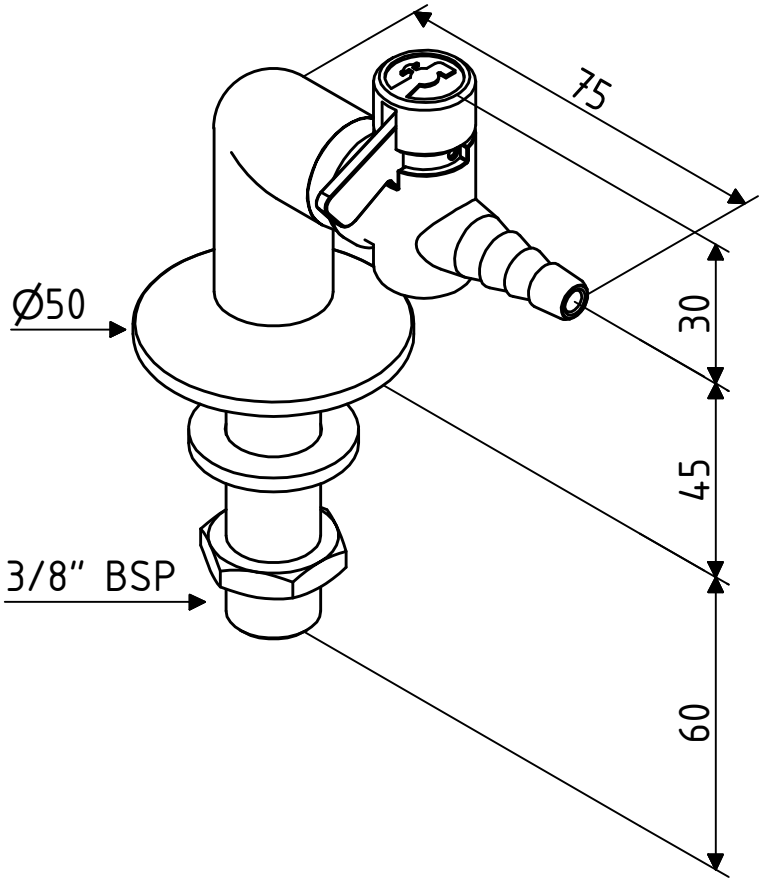
75
Ø50
30
45
3/8" BSP
60